AC - 2330 ELECTRIC SCREWDRIVER



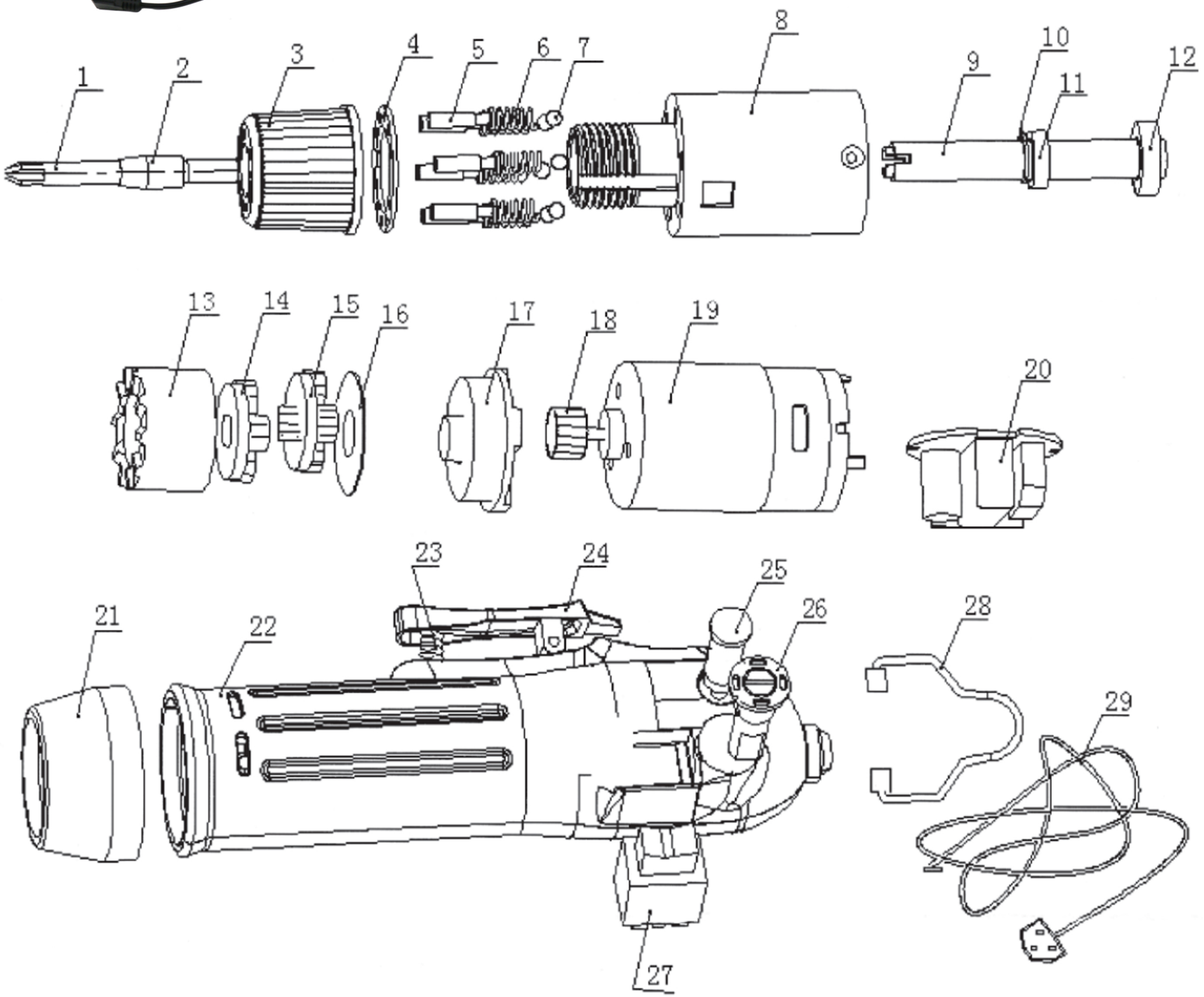

No.	ENGLISH NAME
1	Bit
2	Circlip
3	Lock sleeve
4	Lock sleeve spring
5	Circlip
6	Main axis
7	Steel ball
8	Shaft sleeve
9	Shaft-cup
10	Circlip
11	Front bearing
12	Rear bearing
13	Inner sleeve
14	Carrier planet
15	Carrier planet
16	Gasket
17	Connector
18	Motor gear
19	Motor
20	Circuit board
21	Cap
22	Soft girp
23	Spring
24	Lever switch
25	Light
26	Insurance wire
27	Switch
28	Hanger
29	Cable